BIFOV - Adaptor union

Adaptor union in PVC-U/brass with solvent weld socket d and BSP threaded brass female end R with O-Ring in EPDM.



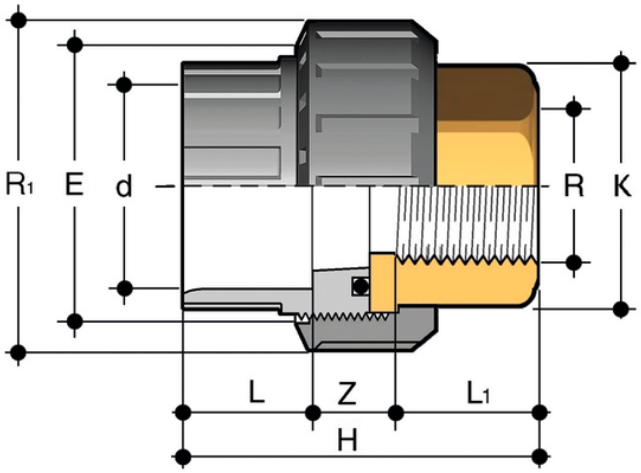

Reference	d x R	R_1	PN	E	H	K	L	L_1	Z	g
BIFOV016038E	16 x 3/8"	3/4"	16	33	45,5	20	14	13,5	18	53
BIFOV020012E	20 x 1/2"	1"	16	41	48,5	25	16	16,5	16	86
BIFOV025034E	25 x 3/4"	1"1/4	16	50	54,5	32	19	18,5	17	161
BIFOV032100E	32 x 1"	1"1/2	16	58	59,5	38	22	19,5	18	181
BIFOV040114E	40 x 1"1/4	2"	16	72	68,5	48	26	21,5	21	373
BIFOV050112E	50 x 1"1/2	2"1/4	16	79	84,5	55	31	23	24,5	460
BIFOV063200E	63 x 2"	2"3/4	16	98	94,5	69	38	27	29,5	824