VKRIV - DUAL BLOCK® regulating ball valve DN 10:50

DUAL BLOCK® regulating ball valve with female ends for solvent welding, metric series.



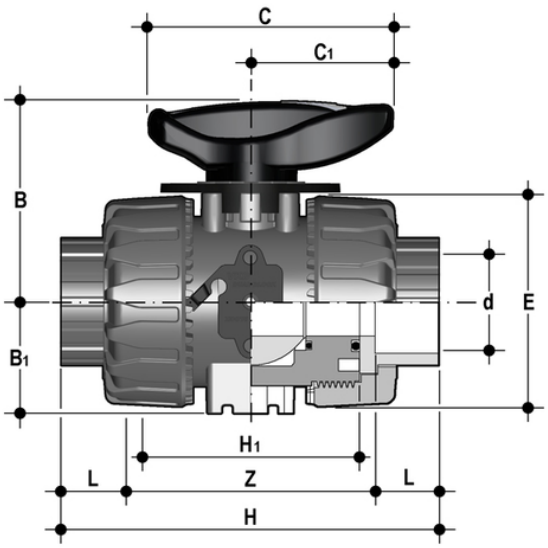

EPDM

Reference	d	DN	PN	B	B_1	C	C_1	E	H	H_1	L	Z	g
VKRIV016E	16	10	16	54	29	67	40	54	103	65	14	75	215
VKRIV020E	20	15	16	54	29	67	40	54	103	65	16	71	205
VKRIV025E	25	20	16	65	34,5	85	49	65	115	70	19	77	330
VKRIV032E	32	25	16	69,5	39	85	49	73	128	78	22	84	438
VKRIV040E	40	32	16	82,5	46	108	64	86	146	88	26	94	693
VKRIV050E	50	40	16	89	52	108	64	98	164	93	31	102	925
VKRIV063E	63	50	16	108	62	134	76	122	199	111	38	123	1577

EPDM

Reference	d	DN	PN	B	B_1	C	C_1	E	H	H_1	L	Z	g
VKRIV016E0LF	16	10	16	54	29	67	40	54	103	65	14	75	215
VKRIV020E0LF	20	15	16	54	29	67	40	54	103	65	16	71	205
VKRIV025E0LF	25	20	16	65	34,5	85	49	65	115	70	19	77	330
VKRIV032E0LF	32	25	16	69,5	39	85	49	73	128	78	22	84	438
VKRIV040E0LF	40	32	16	82,5	46	108	64	86	146	88	26	94	693
VKRIV050E0LF	50	40	16	89	52	108	64	98	164	93	31	102	925
VKRIV063E0LF	63	50	16	108	62	134	76	122	199	111	38	123	1577

VKRIV - DUAL BLOCK® regulating ball valve DN 10:50

EPDM

Reference	d	DN	PN	B	B_1	C	C_1	E	H	H_1	L	Z	g
VKRIV016E0SF	16	10	16	54	29	67	40	54	103	65	14	75	215
VKRIV020E0SF	20	15	16	54	29	67	40	54	103	65	16	71	205
VKRIV025E0SF	25	20	16	65	34,5	85	49	65	115	70	19	77	330
VKRIV032E0SF	32	25	16	69,5	39	85	49	73	128	78	22	84	438
VKRIV040E0SF	40	32	16	82,5	46	108	64	86	146	88	26	94	693
VKRIV050E0SF	50	40	16	89	52	108	64	98	164	93	31	102	925
VKRIV063E0SF	63	50	16	108	62	134	76	122	199	111	38	123	1577

FKM

Reference	d	DN	PN	B	B_1	C	C_1	E	H	H_1	L	Z	g
VKRIV016F	16	10	16	54	29	67	40	54	103	65	14	75	215
VKRIV020F	20	15	16	54	29	67	40	54	103	65	16	71	205
VKRIV025F	25	20	16	65	34,5	85	49	65	115	70	19	77	330
VKRIV032F	32	25	16	69,5	39	85	49	73	128	78	22	84	438
VKRIV040F	40	32	16	82,5	46	108	64	86	146	88	26	94	693
VKRIV050F	50	40	16	89	52	108	64	98	164	93	31	102	925
VKRIV063F	63	50	16	108	62	134	76	122	199	111	38	123	1577

FKM

Reference	d	DN	PN	B	B_1	C	C_1	E	H	H_1	L	Z	g
VKRIV016F0LF	16	10	16	54	29	67	40	54	103	65	14	75	215
VKRIV020F0LF	20	15	16	54	29	67	40	54	103	65	16	71	205
VKRIV025F0LF	25	20	16	65	34,5	85	49	65	115	70	19	77	330
VKRIV032F0LF	32	25	16	69,5	39	85	49	73	128	78	22	84	438
VKRIV040F0LF	40	32	16	82,5	46	108	64	86	146	88	26	94	693
VKRIV050F0LF	50	40	16	89	52	108	64	98	164	93	31	102	925
VKRIV063F0LF	63	50	16	108	62	134	76	122	199	111	38	123	1577

FKM

Reference	d	DN	PN	B	B_1	C	C_1	E	H	H_1	L	Z	g
VKRIV016F0SF	16	10	16	54	29	67	40	54	103	65	14	75	215
VKRIV020F0SF	20	15	16	54	29	67	40	54	103	65	16	71	205
VKRIV025F0SF	25	20	16	65	34,5	85	49	65	115	70	19	77	330

VKRIV - DUAL BLOCK® regulating ball valve DN 10:50

Reference	d	DN	PN	B	B_1	C	C_1	E	H	H_1	L	Z	g
VKRIV032F0SF	32	25	16	69,5	39	85	49	73	128	78	22	84	438
VKRIV040F0SF	40	32	16	82,5	46	108	64	86	146	88	26	94	693
VKRIV050F0SF	50	40	16	89	52	108	64	98	164	93	31	102	925
VKRIV063F0SF	63	50	16	108	62	134	76	122	199	111	38	123	1577

VKRIV - DUAL BLOCK® regulating ball valve DN 10:50

- HIPVC ergonomic multifunctional handle with **position indicator** and tool to adjust the ball seat carrier
- Flow direction and opening angle indication plate with **graduated scale with 5° detail** for clear and accurate readings
- 90° operating angle that permits **the use of standard** quarter turn **actuators**
- The patented ball design provides **linear flow adjustment** throughout its range of operation even when the valve is open just a few degrees and guarantees minimum pressure drops
- Patented **DUAL BLOCK®** system: prevents union nuts from loosening even under extreme operating conditions: e.g. vibration or thermal expansion

- Connection system for solvent weld, threaded and flanged joints
- Patented **SEAT STOP®** ball carrier system that lets you micro-adjust seals and minimise the axial force effect
- Easy radial dismounting allowing quick replacement of O-rings and ball seats without any need for tools
- **PN16 True Union valve body** made for rigid PVC-U injection moulding equipped with built-in bores for actuation. ISO 9393 compliant test requisites
- Option of dismounting downstream pipes with the valve in the closed position
- High surface finish stem with double O-Ring and double connection key to ball
- **Integrated bracket** for valve anchoring
- Ball seat carrier can be adjusted using the **Easytorque adjustment kit**
- Actuation option: version with electric modulating actuator with 4-20 mA / 0-10 V inlet and 4-20 mA / 0-10 V outlet to monitor the position
- Valve suitable for carrying fluids that are clean and free of suspended particles